TOTO

TECHNICAL DATA SHEET

AL-OMRAN Trading Co.
Riyadh – Saudi Arabia
Website: alomrantrd.com

Tel: 0593851408
WhatsApp: 0595333434
Email: project@alomran.sa

DIGITAL CATALOGUE
SCAN HERE

PRODUCT DETAILS

Type	Faucet
Item Code	TBS03302D
Range	LC - Series
Material	Brass
Colour	Chrome

Technical Details and Description :

TOTO – LC - Exposed Single Lever Bath & Shower Mixer

IMAGE

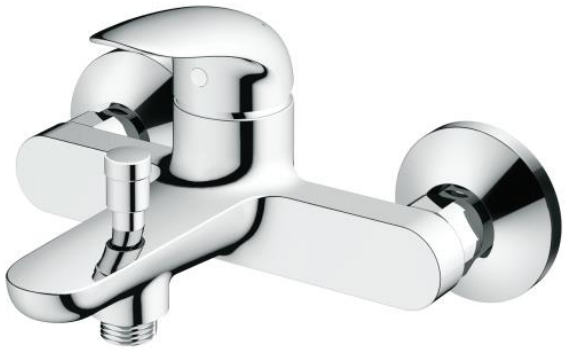

ENVIRONMENTAL & TECHNICAL DATA

Flow Rate	0.05 ~ 1.0 Mpa

Flow Chart : TBA

Design Concept is Life and Curve
TOTO original cartridge for smooth control
High corrosion resistance plating

PRESSURE

TECHNICAL DRAWING

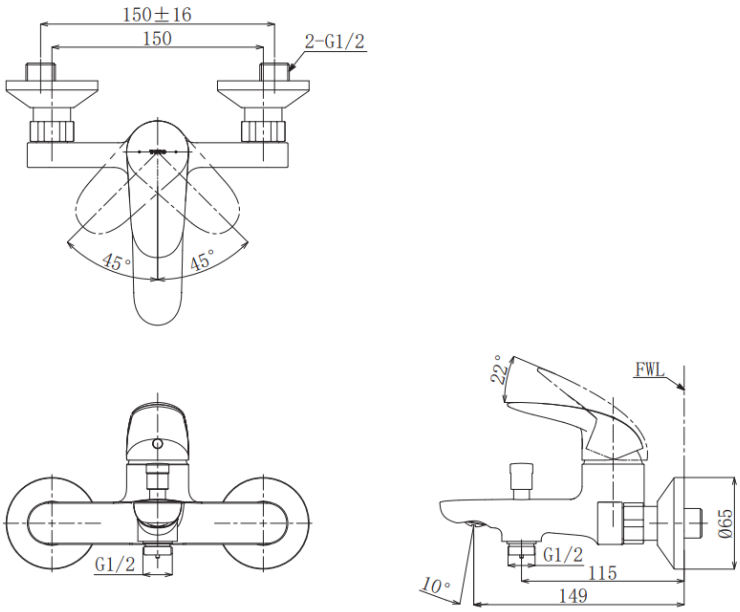

NOTE : This (TBS03302D) MAIN PRODUCT CODE not change - only will be change MAIN PRODUCT CODE end of Letter's Every Year as per SASO request

CERTIFICATION / STANDARDS

Warranty	1 Year
Standards	TOTO Industrial Standards(JIS)

REMARKS

COMPONENTS

Note: All recommended installation dimension are for reference only.