TOTO

TECHNICAL DATA SHEET

AL-OMRAN Trading Co.
Riyadh – Saudi Arabia
Website: alomrantrd.com

Tel: 0593851408
WhatsApp: 0595333434
Email: project@alomran.sa

DIGITAL CATALOGUE
SCAN HERE

PRODUCT DETAILS

Type	Sliding Rail – (Round)
Item Code	TBW01016B
Range	G Selection – Sliding Rail (Round)
Material	Brass
Colour	Chrome

Technical Details and Description :

G Selection – Sliding Rail (Round)

IMAGE

ENVIRONMENTAL & TECHNICAL DATA

Flow Rate	no

Flow Chart : no

LITERS

PRESSURE

TECHNICAL DRAWING

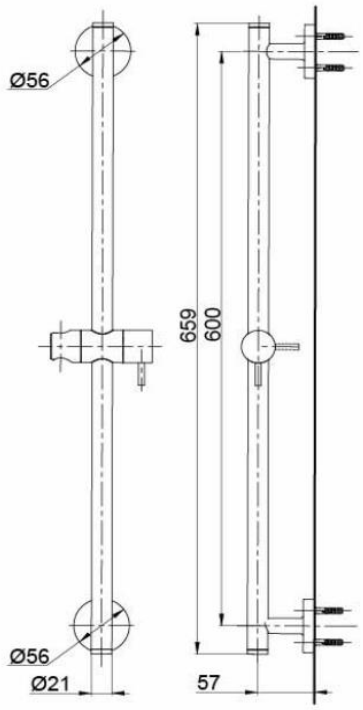

NOTE : This (TBW01016B) MAIN PRODUCT CODE not change - only will be change MAIN PRODUCT CODE end of Letter's Every Year as per SASO request

CERTIFICATION / STANDARDS

Warranty	1 Year
Standards	TOTO Industrial Standards(JIS)

REMARKS

COMPONENTS

Note: All recommended installation dimension are for reference only.