TOTO

TECHNICAL DATA SHEET

AL-OMRAN Trading Co.
Riyadh – Saudi Arabia
Website: alomrantrd.com

Tel: 0593851408
WhatsApp: 0595333434
Email: project@alomran.sa

DIGITAL CATALOGUE
SCAN HERE

PRODUCT DETAILS

Type	Faucet
Item Code	DL334S
Range	Jewelhex
Material	Brass
Colour	Chrome

Technical Details and Description :

TOTO - JEWELHEX One Hole Single Lever Faucet

IMAGE

ENVIRONMENTAL & TECHNICAL DATA

Flow Rate	TBA

Flow Chart : TBA

LITERS

PRESSURE

TECHNICAL DRAWING

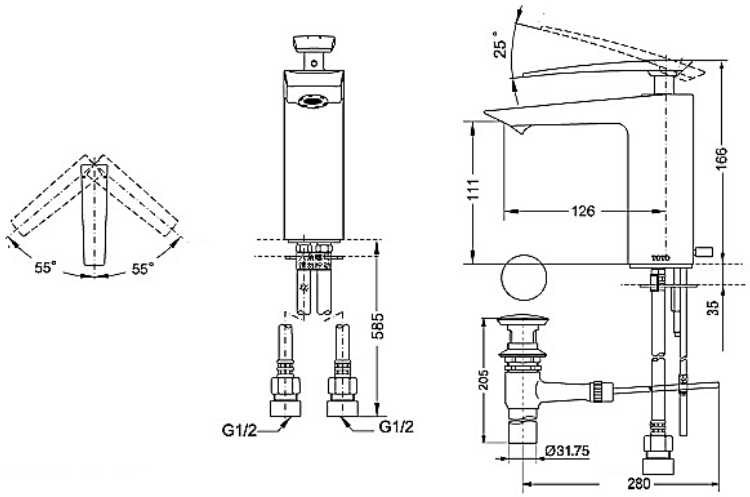

Note: Dashed lines are not part of product.

CERTIFICATION / STANDARDS

Warranty	1 Year
Standards	TOTO Industrial Standards(JIS)

REMARKS

COMPONENTS

Note: All recommended installation dimension are for reference only.

W.A